Pressure transmitter for highest pressure applications up to 15,000 bar
Model HP-2

WIKA Data Sheet PE 81.53

Applications

- Test benches
- Water jet cutting
- High pressure pasteurisation
- High pressure cleaning

Special Features

- Pressure ranges up to 15,000 bar
- Accuracy 0.5 %
- Output: 4 ... 20 mA, 0 ... 10 V, etc.
- Electrical connection: DIN 175301-803 A L-connector, M12x1 circular connector, flying leads, etc.
- Pressure connections: M16x1.5 female, M20 x1.5 female, 9/16-18 UNF female F250-C

Pressure transmitter HP-2

Description

The pressure transducer HP-2 is designed for superior highest pressure applications up to 15,000 bar.
HP-2 provides a very high long-term stability and a very good accuracy.

Due to its excellent life cycle behaviour HP-2 offers an extra long service life also for dynamic pressure curves.

The optional cavitation and peak pressure protection has been developed especially for highly dynamic pressure curves. It provides an extended operating time even in demanding applications.

Data Sheets for related models:
Intrinsically safe pressure transmitter for highest pressure applications; Model IS-20-H; see Data Sheet PE 81.51

Part of your business

Specifications — Model HP-2

Pressure ranges	bar	1,600	2,500	4,000	5,000	6,000	7,000	8,000	10,000
Over pressure safety	bar	2,300	3,500	5,000	6,000	7,000	8,000	10,000	11,000
Burst pressure	bar	4,000	6,000	8,000	10,000	11,000	11,000	12,000	12,000
Pressure ranges	psi	23,000	36,000	58,000	72,000	87,000	100,000	115,000	145,000
Over pressure safety	psi	33,300	50,500	72,500	87,000	101,500	116,000	145,000	159,500
Burst pressure	psi	58,000	87,000	116,000	145,000	159,500	159,500	174,000	174,000
		Up to 15,000 bar / 217,000 psi on request.							
Materials									
■ Wetted parts		1.4534							
■ Case		Stainless steel							
Power supply UB	UB in VDC	10 ... 30 (14 ... 30 with signal output 0 ... 10 V)							
Signal output and	RA in Ohm	4 ... 20 mA, 2-wire		RA ≤ (UB – 10 V) / 0.02 A					
maximum ohmic load RA		0 ... 5 V, 3-wire		RA > 5 k					
		0 ... 10 V, 3-wire		RA > 10 k					
		Other signal outputs on request.							
Adjustability zero	%	± 5 using potentiometers inside the instrument							
Response time (10 ... 90 %)	ms	≤ 1							
Insulation voltage	VDC	500							
Accuracy	% of span	≤ ± 0.5 *)							
	% of span	≤ ± 0.25 *) on request							
	*) Including non-linearity, hysteresis, zero point and full scale error								
	(corresponds to error of measurement per IEC 61298-2).								
1-year stability	% of span	≤ 0.1		(at reference conditions)					
Permissible temperature of									
■ Medium **)		0 ... +80 °C		+32 ... +176 °F					
■ Ambience **)		-20 ... +80 °C		-4 ... +176 °F					
■ Storage **)		-40 ... +85 °C		-40 ... +185 °F					
	**) Also complies with EN 50178, Tab. 7, Operation (C) 4K4H, Storage (D) 1K4, Transport (E) 2K3								
Rated temperature range		0 ... +80 °C		+32 ... +176 °F					
Temperature error within									
rated temperature range	%	≤ 1.0 typ.							
		≤ 2.5 max.							
RoHS-conformity		on request							
CE-conformity									
■ Pressure equipment directive		97/23/EC							
■ EMC directive		2004/108/EC, EN 61 326 Emission (Group 1, Class B) and							
		Immunity (industrial locations)							
Shock resistance	g	100 (2.4 ms)		according to IEC 60068-2-27					
Vibration resistance	mm	0.35 (10 ... 55 Hz)		according to IEC 60068-2-6					
Wiring protection									
■ Short-circuit proofness		Sig+ towards UB-							
■ Reverse polarity protection		UB+ towards UB-							
Weight	kg	Approx. 0.3							

Electrical connections

	L-connector DIN 175301-803 A			Circular connector M12x1			Flying leads		
2-wire	UB = 1	0V = 2		UB = 1	0V = 3		UB = brown	0V = green	
3-wire	UB = 1	0V = 2	S+ = 3	UB = 1	0V = 3	S+ = 4	UB = brown	0V = green	S+ = white
Wire gauge	up to max. 1.5 mm2			-			0.5 mm2 (AWG 20)		
Diameter of cable	6-8 mm			-			6.8 mm		
Ingress protection per IEC 60 529	IP 65			IP 67			IP 67		
	The ingress protection classes specified only apply while the pressure transmitter is connected with female connectors that provide the corresponding ingress protection.								

Dimensions in mm

L-connector
DIN 175301-803 A

Circular connector M 12x1,
4-pin

Flying leads
with 1.5 m length (PUR)

with optional
cavitation and peak pressure
protection

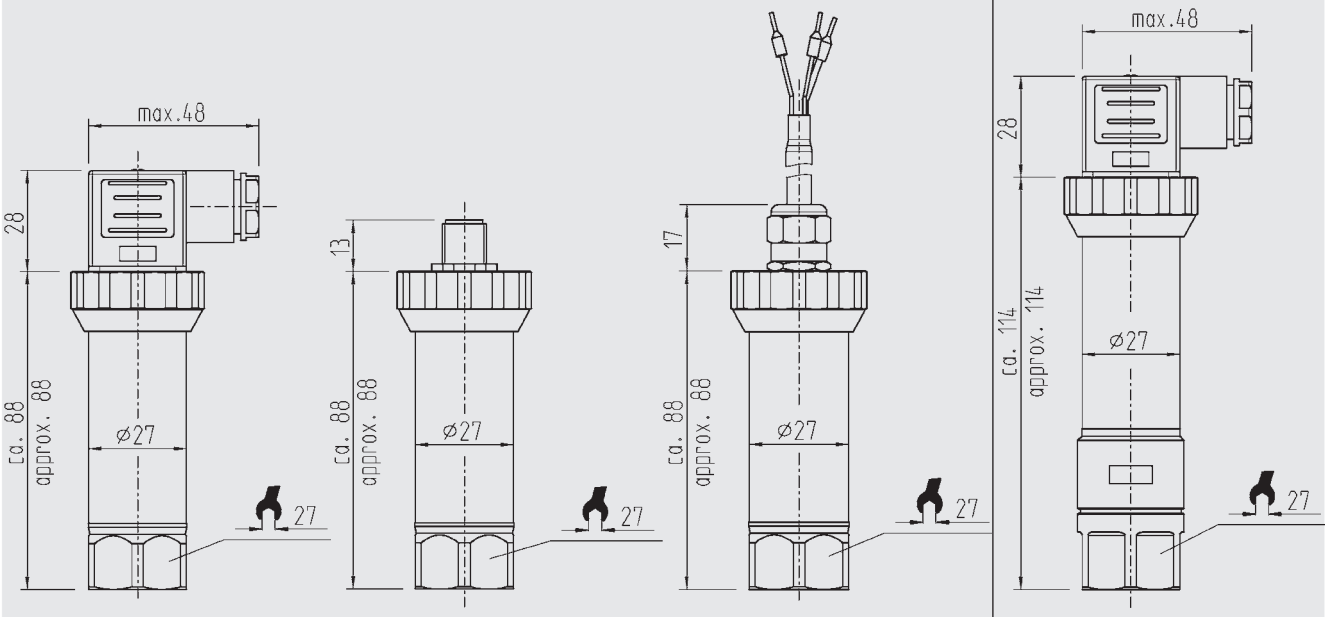

Pressure connections

M16x1.5 female,
with sealing cone
(up to 7000 bar) *)

M20x1.5 female,
with sealing cone *)

9/16-18 UNF female,
F250-C
(up to 7000 bar) *)

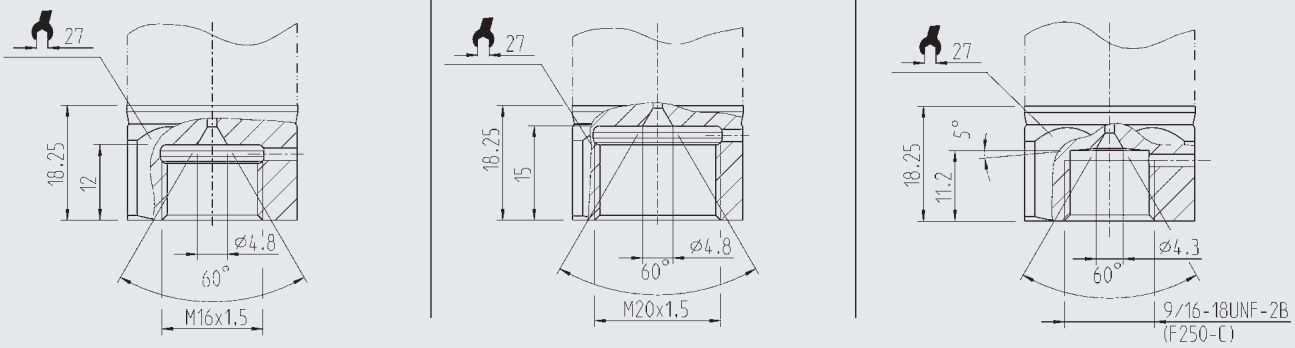

For installation and safety instructions see the operating instructions for this product.
The respective values for your mounting torque and maximum pressure please find in the documentation of your high-pressure equipment supplier.

*) The respective values for your mounting position please find in the documentation of your high-pressure equipment supplier.

Specifications and dimensions given in this leaflet represent the state of engineering at the time of printing.
Modifications may take place and materials specified may be replaced by others without prior notice.

WIKA Alexander Wiegand GmbH & Co. KG
Alexander-Wiegand-Straße 30
63911 Klingenberg/Germany
Tel. (+49) 9372/132-0
Fax (+49) 9372/132-406
E-mail info@wika.de
www.wika.de

12977391 08/2008 GB